Tubular Solenoid (Interlock)

MT2057

- High Side-Load Capability
- Optional DC Voltage Ratings
- Bearing-Mounted Stainless Bolt
- Flying Leads with Optional connectors
- Threaded Mounting
- Long Life
- Corrosion Resistant Finish

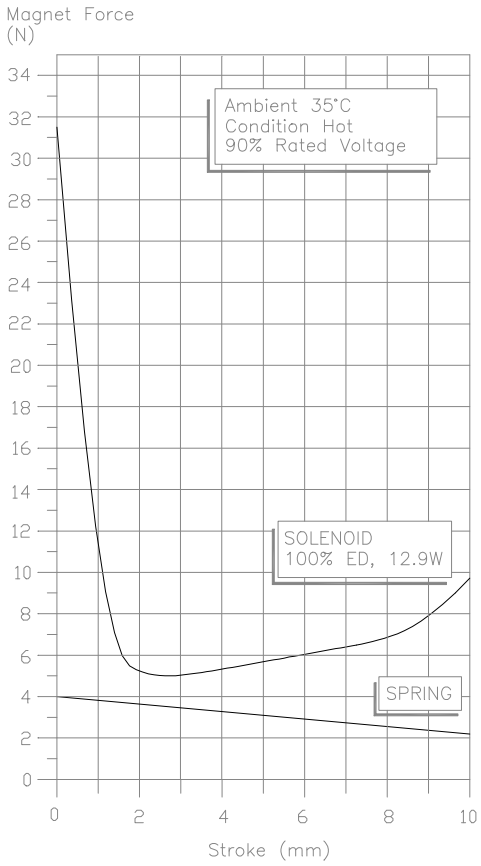

PLUNGER MASS	0.078 kg
SOLENOID MASS	0.460 kg
MAX ALLOWABLE RADIAL BOLT LOAD (APPROX)	
STATIC	1500 N
DYNAMIC	7 N
INSULATION CLASS	F
PASSIVATED ZINC BODY	

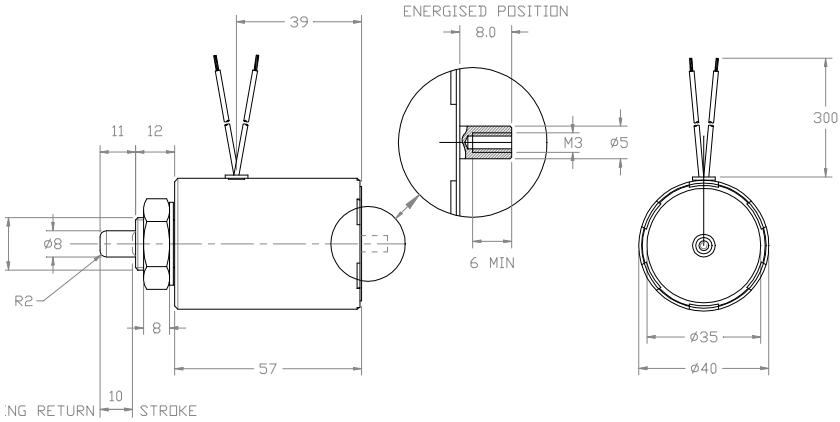

St Helen Auckland, Bishop Auckland,
Co. Durham. DL14 9AA England
Tel: + 44 (0)1388 604000
Fax: + 44 (0)1388 607666
Email: enquiries@mechetronics.co.uk
Web: www.mechetronics.com

MECHETRONICS LIMITED